S.M.P.S | LED Converter | Water Proof Converter

F250S30CT2(D) Series

250W single output with C.C circuit
and PFC function

- Constant current design(C.C. mode)
- Built-in PFC function
- Protections:Over current / Short circuit
- IP68 design for outdoor installations
- 100% full load burn-in test
- 3 in 1 dimming function
- Suitable for LED lighting and street lighting applications
- Safety standards : K61347-2-1,K61347-2-13
- EMC standards : K00015,K61547,K61000-3-2,3
- Metal case

UPF250S30CT2D
Blank : IP68 rated. Cable for I/O connection.
Output voltage and current level can be adjusted through internal potentiometer
D(option) : IP68 rated. Constant current level adjustable through output cable with 10V PWM signal or 1-10Vdc or resistance

IP68 SELV

ITEM		UPF250S30CT2□
INPUT	VOLTAGE RANGE	AC180~264V
	FREQUENCY RANGE	47~63Hz
	POWER FACTOR	PF>0.95 at full load
	THD(max.)	20%(@Dimming 1V~10V)
	EFFICIENCY(typ.)	93%
	AC CURRENT(typ.)	1.15A/230VAC
	INRUSH CURRENT(typ.)	50A/230VAC
	LEAKAGE CURRENT	<2.5mA / 230VAC
OUTPUT	RATED CURRENT	7.7A
	CONSTANT CURRENT REGION	24-30V
	RATED POWER	231W
	CURRENT ADJ. RANGE	5.6~7.7A
	CURRENT ACCURACY	±5%
	RIPPLE&NOISE(max.) Note2	150mVp-p
	SETUP,RISE TIME(max.)	3000ms,100ms/230VAC at full load
	HOLD UP TIME(typ.)	15ms/230VAC at full load
PROTEC -TION	OVER CURRENT Note3	95~108%
	SHORT CIRCUIT	Hiccup mode ; recovers automatically after fault condition is removed
	OVER TEMPERATURE	Dimming down 70% at TC 85°C
ISOLA -TION	WITHSTAND VOLTAGE	I/P-O/P:AC3KV, I/P-F.G:AC1.5KV, O/P-F.G:AC0.5KV
	ISOLATION RESISTANCE	I/P-O/P, I/P-F.G, O/P-F.G:DC500V 100Mohms(At room temp. & humid.)
ENVIRON -MENT	WORKING TEMP.&HUMID.	-40~+70℃(Refer to "DERATING CURVE),20~95%RH
	STORAGE TEMP.&HUMID.	-40~+80℃,10~95%RH
	VIBRATION	10~500Hz, 5G 12min./1cycle, period for 72min. each along X, Y, Z axes
OTHERS	DIMENSION/WEIGHT	268*75.5*43.6mm(L*W*H)/1.18Kg

NOTE

1. All parameters not specially mentioned are measured at 230Vac input, rated load and 25℃ of ambient temperature.
2. Ripple & noise are measured at 20MHz of bandwidth by using a 12" twisted pare-wire terminated with 0.1 uF & 47uF parallel capacitor.
3. Refer to "DRIVING METHODS of LED MODULE"

■ BLOCK DIAGRAM

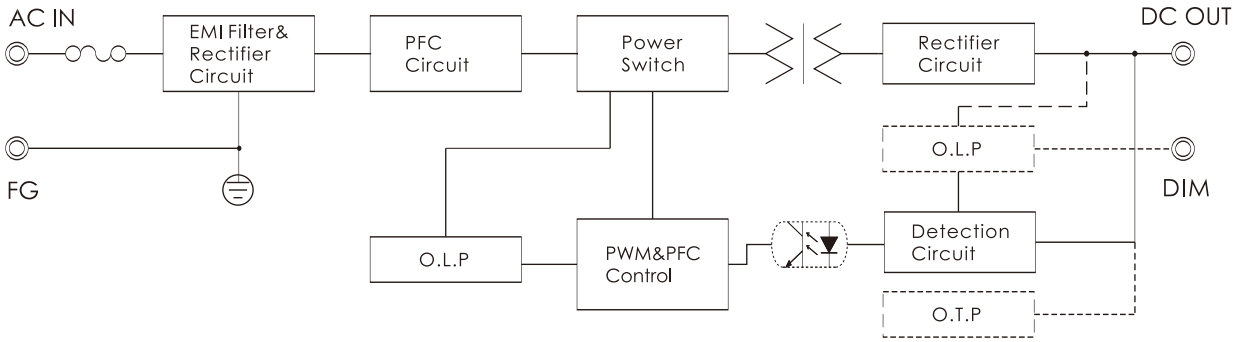

■ DIMENSIONS(unit:mm)

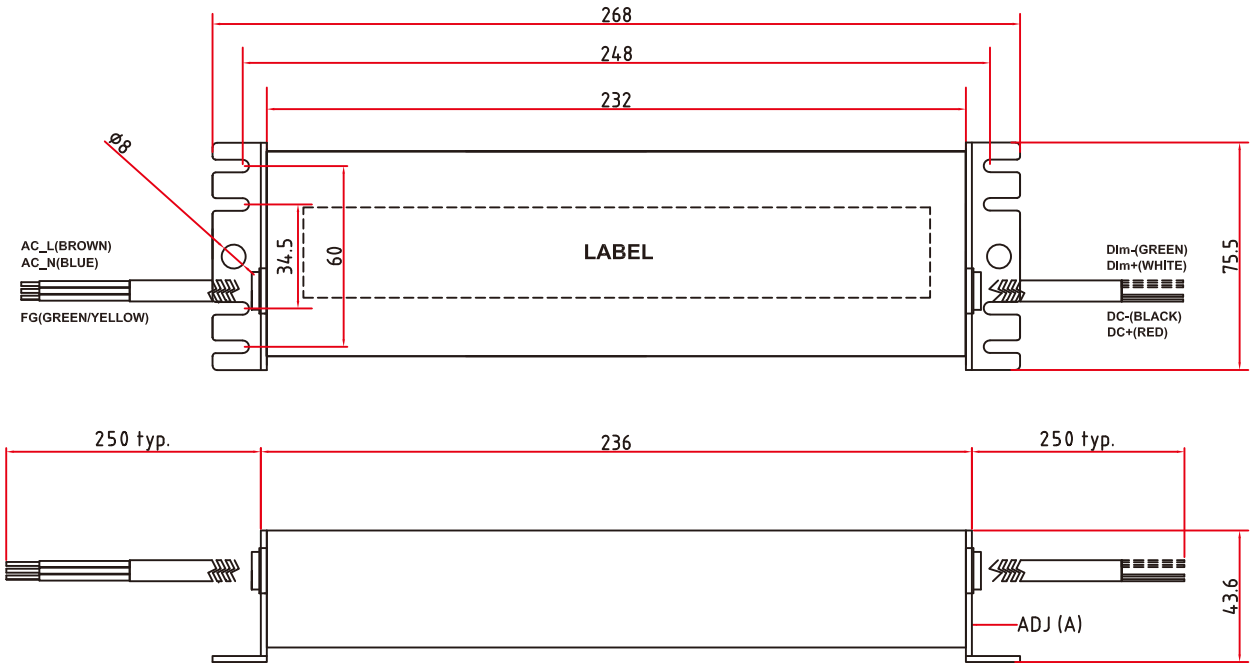

■ DERATING CURVE

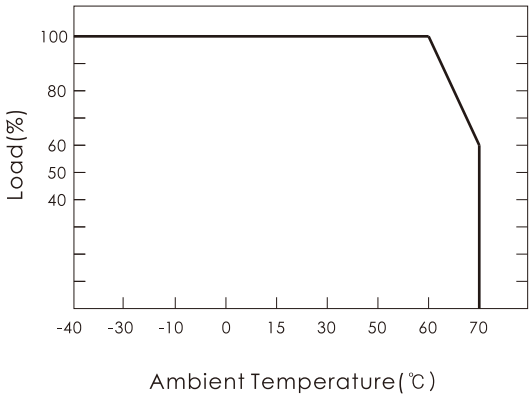

■ STATIC CHARACTERISTICS

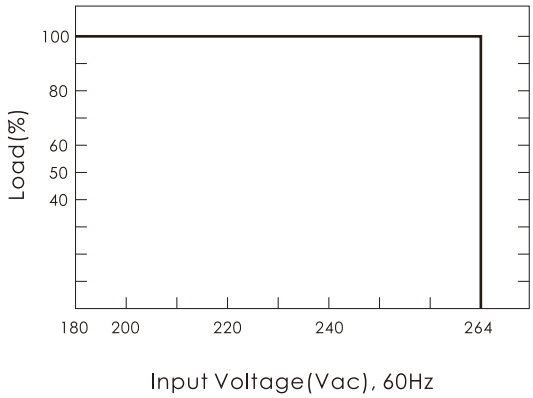

■ DIMMING OPERATION

- **Built–in 3 in 1 dimming function.**
  Output constant current level can be adjusted through output cable by connecting 10V PWM signal or 1-10Vdc or resistance between DIM+ and DIM-.

- **Please do not connect 'DIM-' to 'V-'**

● 10V PWM signal for output current adjustment(typ.):
frequency range:100Hz~3KHz

Duty Value	10%	20%	30%	40%	50%	60%	70%	80%	90%	100%	Open
Percent of Rated Current	5~20%	15~25%	25~35%	35~45%	45~55%	55~65%	65~75%	75~85%	85~95%	95~105%	95~108%

● 1-10V dimming function for output current adjustment(typ.)

Dimming Value	1V	2V	3V	4V	5V	6V	7V	8V	9V	10V	Open
Percent of Rated Current	5~20%	15~25%	25~35%	35~45%	45~55%	55~65%	65~75%	75~85%	85~95%	95~105%	95~108%

● Reference resistance value for output current adjustment(typ.)

Resistance Value	Single driver	10KΩ	20KΩ	30KΩ	40KΩ	50KΩ	60KΩ	70KΩ	80KΩ	90KΩ	100KΩ	Open
	Multiple driver (N=driver quantity for synchronized dimming operation)	10KΩ /N	20KΩ /N	30KΩ /N	40KΩ /N	50KΩ /N	60KΩ /N	70KΩ /N	80KΩ /N	90KΩ /N	100KΩ /N	---
Percent of Rated Current		5~20%	15~25%	25~35%	35~45%	45~55%	55~65%	65~75%	75~85%	85~95%	95~105%	95~108%